D6T

Track-Type Tractor

Engine – Standard		
Engine Model	Cat® C9 ACERT®	
Net Power – ISO 9249	138 kW	185 hp
Engine – XL / XW / LGP		
Net Power – Caterpillar	149 kW	200 hp

D6T Track-Type Tractor

Operator Station

The comfortable operator's station provides an excellent viewing area to the blade and rear of the machine for maximum operator productivity. Controls are low effort and easy to reach. **pg. 4**

Engine

✔ ACERT® Technology works at the point of combustion to optimize engine performance and provide low exhaust emissions. Matched with the torque divider and power shift transmission, it provides years of dependable and efficient service. **pg. 6**

Power Train

The electronically controlled power shift transmission and differential steering work together with the new C9 ACERT® engine for maximum efficiency. **pg. 8**

Work Tools

✔ Caterpillar® offers a variety of work tools to equip your D6T with the versatility needed to accomplish the job quickly and efficiently. **pg. 14**

Integrated Electronic Solutions

✔ Caterpillar offers technology options such as Product Link and AccuGrade™ Grade Control System that provide greater accuracy, higher productivity, lower operating costs and more profitability. **pg. 16**

Engineered for demanding work. The D6T is designed to be productive in a variety of applications. It keeps material moving with the reliability and low operating costs you expect from Cat machines.

Structure

A heavy, strong and durable mainframe, strong case steel castings and reinforced frame rails provide durable support to the undercarriage, elevated final drives and other integral frame components. **pg. 10**

Serviceability

Major components have a modular design for excellent serviceability and fast in-field component exchange. **pg. 11**

SystemOne™ Undercarriage

✔ With the elevated sprocket design, the final drives are located above the work area, isolating them from ground induced impacts. The different undercarriage configurations allow the machine to be matched to the application needs. **pg. 12**

Total Customer Support

Your Cat® dealer offers a wide range of services that can be set up under a customer support agreement when you purchase your equipment. The dealer will help you choose a plan that can cover everything from machine and attachment selection to replacement – helping get the best return on investment. **pg. 18**

✔ *New Feature*

Operator Station

The D6T operator's station is designed for comfort and ease of operation.

Cab. An isolation-mounted, pressurized cab reduces noise and vibration for operator comfort. The cab is pre-wired for a 12-volt or 24-volt radio, equipped with two speakers, an antenna and a radio mount recessed in the headliner.

Clear Working View. The operator has an excellent view to the blade and rear of the machine for maximum productivity. The tapered hood, notched fuel tank and narrow single-shank ripper carriage give the operator a clear line of sight to the front and rear work areas. The large single-pane windows offer excellent viewing to the sides and blade. The low rear window lets the operator see the ripper tip.

Cat Comfort Series Seat. The Cat Comfort Series seat has a thick, contoured cushion, rolled down front edge and is adjustable eight-ways for optimal support and comfort. Seat side bolsters restrain side-to-side movement when working on steep grades or side slopes. The seat and suspension are designed for 10,000-hour life.

Adjustable Armrests. Standard, adjustable armrests provide additional comfort for the operator. Adjustment can be performed without the use of any tools.

In-Dash Instrument Cluster. The instrument panel, with easy-to-read gauges and warning lamps, keeps the operator aware of all system information. All gauges and readouts are easily visible in direct sunlight.

Cat Monitoring System Display. The dash mounted instrument cluster provides on-the-go operating information and gives the operator and service technician insight into the machine's operation and maintenance needs. The Caterpillar Monitoring System includes:

- Fuel level gauge
- Hydraulic oil temperature gauge
- Engine coolant temperature gauge
- Power train oil temperature gauge
- Engine oil pressure indicator
- Digital readout
- Transmission gear indicator

Heating and Air Conditioning. Conveniently located air circulation vents evenly distribute airflow within the cab. Controls are easily accessible from the operator seat.

Power Converter. The D6T features a 10-amp, 12-volt power converter for the convenient use of radios, wireless phones and laptop computers.

Work Tool Lock-Out Switch. Redesigned from a mechanical rotary switch to an electronic rocker switch, the work tool lock-out valve prevents inadvertent operation of the hydraulic work tool attachments.

Throttle Rocker Switch. With the touch of a finger, the rocker switch activates high or low idle. A decelerator pedal gives the operator full control of engine speed when the rocker switch is in the high idle position. Engine speed can be set between high and low idle by simultaneously using the decelerator pedal and holding the Rabbit side of the throttle switch in for three seconds.

Steering and Transmission Control. Differential steering controls the direction and degree of turns, forward-reverse shifting and gear selection in a single control handle which enhances operator comfort. Touch shift buttons on the steering control shifts the electronically controlled powershift transmission. The tiller allows the operator to work precisely in close areas around structures, grade stakes and other machines with the finest modulation in the industry.

Auto-Shift/Auto-Kickdown. Auto-shift allows the operator to pre-select a forward and reverse gear for easy, efficient directional changes. Auto-shift settings include first forward to second reverse, second forward to second reverse, and second forward to first reverse. Auto-kickdown allows the transmission to automatically downshift when significant load increases are detected.

Dozer Control Lever. The D6T features ergonomically designed dozer controls with low-effort, pilot-operated hydraulics for added operator comfort, easy operation and precise work tool control. When equipped with a VPAT blade, the blade control allows simultaneous six-way control of the blade with a thumb rocker control to adjust blade angle. The dozer control is changed to an electro-hydraulic control when the AccuGrade Ready Option is installed.

Ripper Control Lever. The ripper control with low-effort pilot-operated hydraulics contributes to operator comfort, easy operation and precise work tool control.

Engine

A combination of innovations working at the point of combustion, ACERT® Technology optimizes engine performance while meeting emission regulations for off-road applications.

Cat C9 with ACERT Technology. The Cat C9 is an 8.8 L (537 in^3) displacement, six cylinder, in-line configured engine with hydraulically actuated electronic fuel injection or HEUI™. It uses ACERT Technology, a series of Caterpillar engineered innovations that provide advanced electronic control, precision fuel delivery and refined air management, resulting in outstanding performance and lower emissions. The C9 with ACERT Technology meets U.S. EPA Tier 3 and European Union Stage IIIa emissions standards.

Cylinder Block. Increased block and head material strength minimizes the effect of high cylinder pressure. A strengthened flywheel housing joint reduces leaks. The sculpted heavy-duty design reduces sound and vibration levels. The mid-supported liner has fewer sealing joints for a reduced risk of leaks. The integral oil cooler reduces engine width, weight and potential leaks while improving coolant and oil flow.

Cylinder Head. A new cross-flow air design with four valves per cylinder and updated port geometry dramatically improve airflow and engine breathability. The cylinder head block features a robust six-bolt design for an improved seal between the head and block at the fire ring which prevents combustion gas leaks. It also minimizes bore/liner distortion. The improved intake port geometry provides a smoother transition and less flow restrictions.

Fractured-Split Connecting Rods. The new fractured-split connecting rods are designed to create near-perfect joint alignment, maximizing rod bearing life. This, in combination with a high efficiency oil filter, ensures long engine life.

ADEM™ A4 Engine Controller. The air-cooled ADEM A4 controller is the brain of the engine and contains the engine's control software. It regulates fuel delivery, airflow and other engine functions. In addition, it directs the HEUI injectors to deliver multiple injections of fuel during the engine's compression stroke.

Fuel Delivery. Multiple injection fuel delivery involves a high degree of precision. Precisely controlling the combustion cycle lowers combustion chamber temperatures, which lowers emissions and optimizes fuel economy. This translates into more work output per unit of fuel.

HEUI™ Fuel System. The HEUI fuel system is highly evolved, with a proven record of reliability. HEUI uses the technical advancement of an electronic control system with the flexibility of hydraulically controlled unit fuel injection. The system excels in its ability to control injection pressure over the entire engine operating speed range. These features allow the C9 to have complete control over injection timing, duration, and pressure.

Air-to-Air Aftercooler. The air-to-air aftercooler (ATAAC) brings cool air to the engine which increases life and lowers emissions. In addition, the ATAAC, together with the tight tolerance combustion chamber components, maximizes fuel efficiency.

Wastegate Turbocharger. The wastegate allows high-volume exhaust to be routed around the turbocharger to the exhaust piping to prevent wheel spin overspeed at high rpm but low load conditions.

Service. The new C9 engine offers easier maintenance and repair through monitoring key functions and logging critical indicators. Electronic diagnostic access is possible with a single tool, the Cat Electronic Technician.

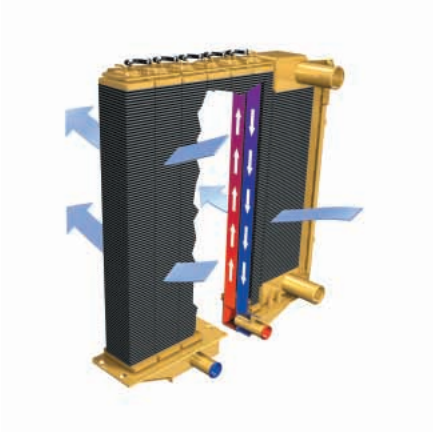

Next Generation Modular Radiator (NGMR). Improves cooling capabilities by using a parallel flow system with six cores. Serviceability is improved with NGMR since there is no top tank to remove.

Serviceability. This modular core design permits removal of a single core without removing the entire radiator so repair costs and downtime are reduced. The top tank, side channels and one sealing surface makes AMOCS more reliable and easier to service. A site gauge allows for quick service checks.

Leak Protection. To reduce the potential for coolant leaks, brass tubes are welded to a large, thick header to improve the strength of the tube-to-header joint. In conditions where abrasive materials can be airborne, the attachment sand blast grid should be used to prevent core damage.

Sand Blast Grid. In an application where airborne debris is prevalent, radiator core protection is a concern. To extend radiator life in harsh applications, a sand blast grid is available as an option to deflect the damaging debris the engine fan propels at the radiator.

Demand Fan Option. Based primarily on ambient air temperature, the optional demand fan can improve productivity up to three percent and reduce fuel consumption up to four percent since the demand fan will only run at a speed needed to meet the cooling requirements of the machine. As cooling requirements increase above 24° C (75° F), the demand fan performance converges towards that of the standard fan so lesser benefit is achieved.

Power Train

The power shift transmission and differential steering work in tandem with the new C9 engine to deliver the outstanding power and reliability expected from Caterpillar.

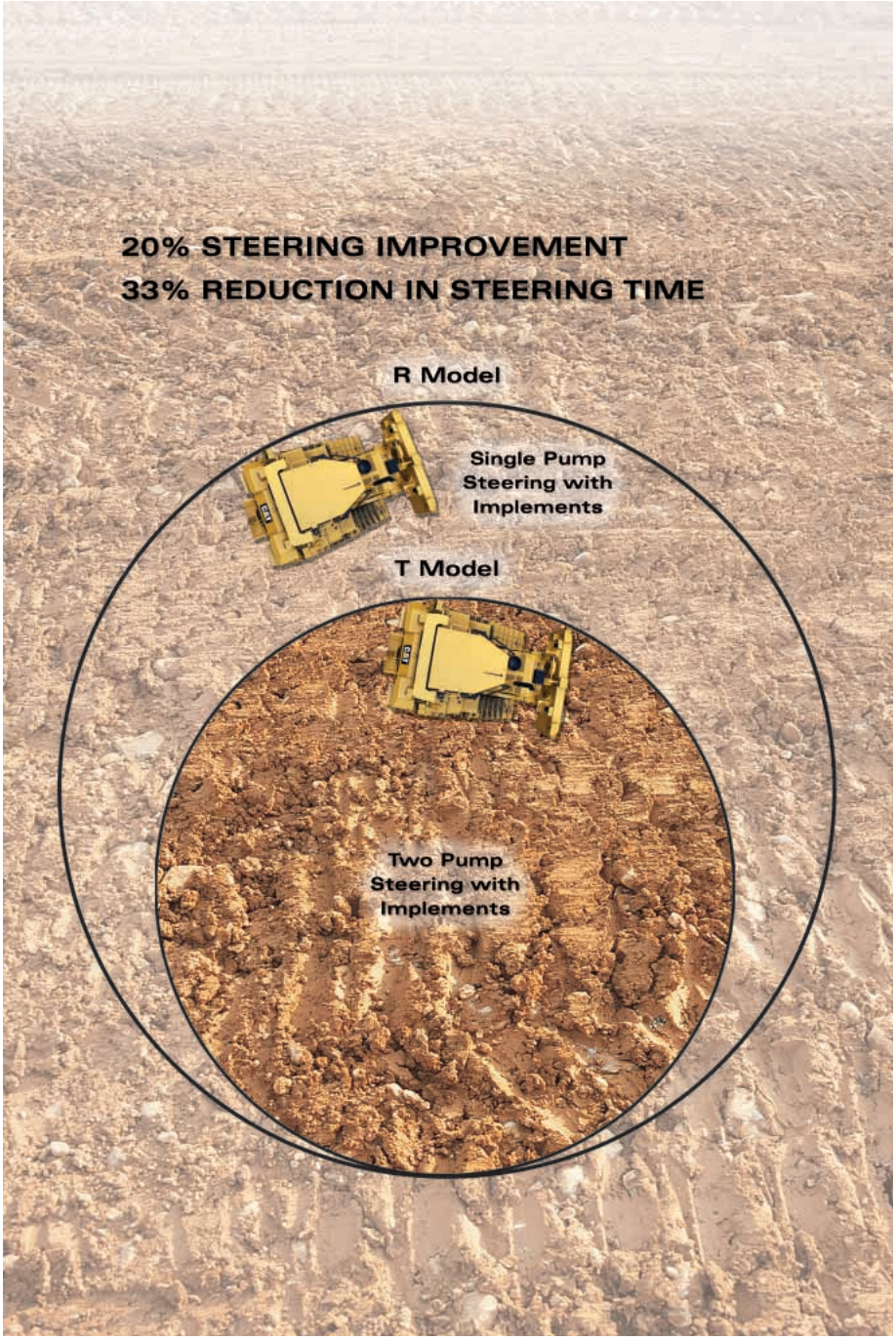

Two Pump Hydraulic System.

- Split pump design for dedicated hydraulic power to steering and implements, improving blade and ripper response and overall power in steering-intensive applications
- Improved steering performance independent of implement operation
- Constant flow in steering circuit improves hydraulic cooling, increasing cooling capacity of the machine
- Improved response in simultaneous steering/implement applications, making the machine more maneuverable overall
- Enhanced blade response when using AccuGrade

Torque Divider. A single-stage torque divider sends 70 percent of engine torque through a converter and 30 percent through a direct drive shaft for greater drive line efficiency and higher torque multiplication.

The D6T torque divider provides:

- High reliability
- Low dynamic torque
- Optimum combination of operator efficiency and drive line reliability
- Components designed to absorb full engine power

DISPLAY	
5 Speed	3 Speed
1.5	1
2.0	
2.5	2
3.0	
3.5	3

Multi Velocity Program (MVP). The Multi Velocity Program (MVP) is an innovative machine control system that allows the operator to choose from five different speed ranges in Forward and Reverse, providing the operator with the flexibility to match machine speed to a variety of applications and ground conditions. This exclusive solution allows the operator to maximize production, minimize fuel consumption,and lower overall machine operating costs.

MVP provides the operator with five speed ranges in both Forward and Reverse. The engine speed in each speed range has been optimized to provide the best performance, fuel economy, and drawbar pull. The operator retains the ability to operate the machine in either the 3 speed or 5 speed mode.

Operating Efficiency and Drive Line Reliability. The D6T torque divider attains the best combination of operating efficiency and drive line reliability. It acts as a hydrodynamic component between the engine and transmission to reduce dozing shock loads to the transmission and final drives.

Planetary Power Shift Transmission. The D6T planetary power shift transmission utilizes large diameter, high capacity, oil-cooled clutches. These clutches provide higher torque capacity and increased service life. The planetary power shift transmission offers several key features and benefits, including:

- Electronically controlled modulation system that allows fast, smooth speed and direction changes
- Modular transmission and differential slide into rear case for servicing ease, even when a ripper is installed

Differential Steering System. Differential steering maintains power to both tracks while turning. The tractor turns when one track speeds up and the other slows down an equal amount. The operator can steer and control the transmission simultaneously, which can reduce cycle times in some applications. The differential steering tiller bar has touch shift buttons for upshifts and downshifts. Low tiller bar efforts assure operator comfort during long shifts. Large blade loads can be maneuvered around buildings, bridge abutments, trees or other obstacles. Steering modulation is also optimized for precise control in these applications. Greater load capacity, power and speed control are possible in soft underfoot conditions on steep slopes because both tracks are powered during turns.

Elevated Final Drive. Elevated final drives are isolated from ground and work tool-induced impact loads for extended power train life. The modular design ensures quick and easy service when required.

Load Compensating Shifting. With load compensating shifting, clutch engagement timing automatically adjusts according to the load factor. This allows improved tractor performance and operator comfort during speed changes and reduces the amount of energy dissipated through the clutches to help extend transmission component life.

Structure

The D6T frame is built to absorb high impact shock loads and twisting forces.

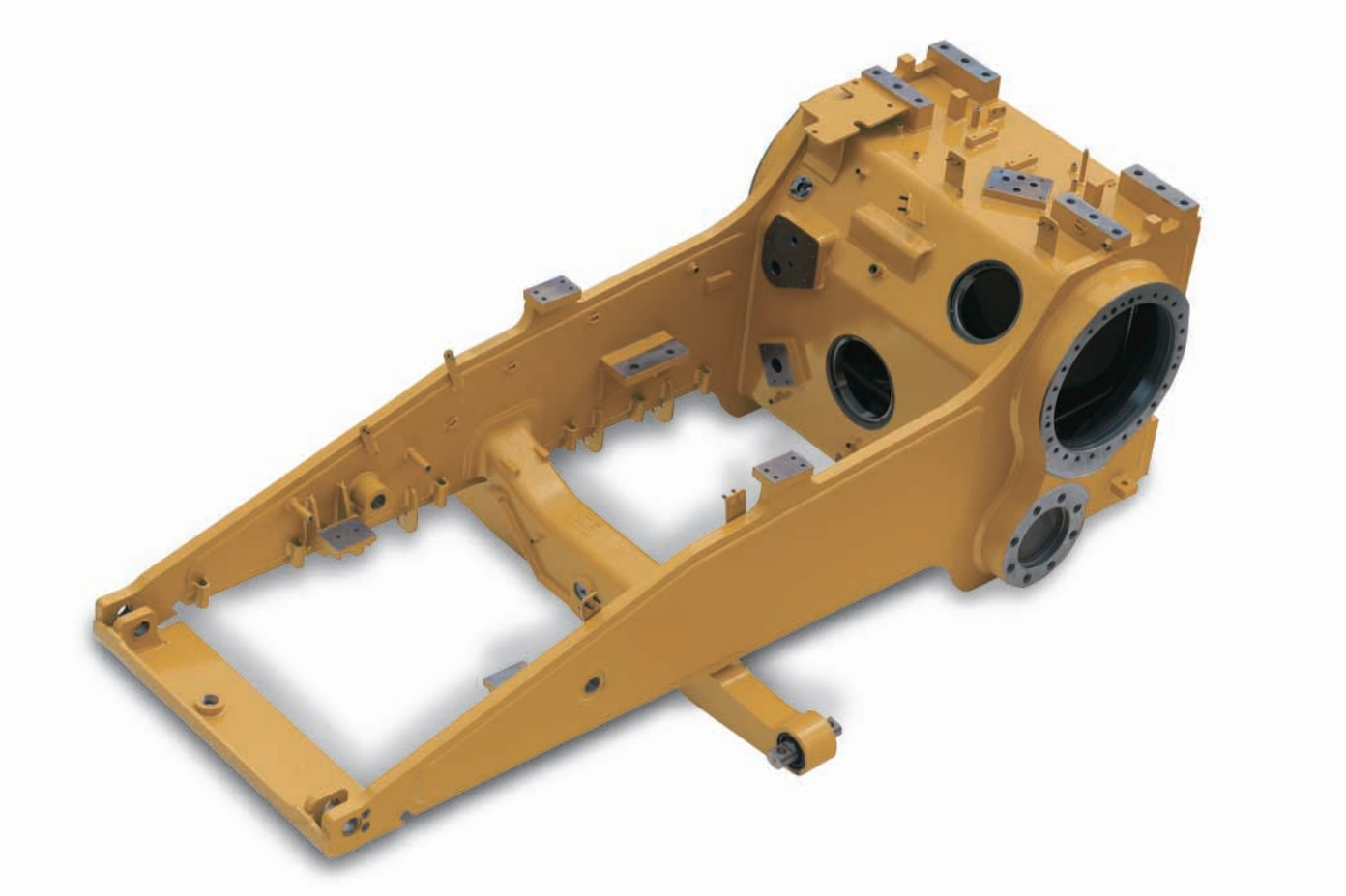

Frame and Castings. The D6T frame is built to absorb high impact shock loads and twisting forces. The frame has a reinforced saddle and a welded front cross-member that add strength to the frame to better handle lateral and twisting forces. Steel castings augment the strength of the main case.

VPAT Frame. The D6T VPAT frame has solid side rails to provide a stronger structure. The trunnion joint is located in the saddle to allow the dozer side loads to go into the mainframe instead of through the radiator guard. The reinforced saddle accommodates additional loads through the frame.

Pivot Shaft. The pivot shaft is bolted to the mainframe and connects to the rear roller frames to allow independent oscillation. The pivot shaft distributes impact loads through the case. This design eliminates alignment problems and the need for diagonal braces on the roller frames.

Equalizer Bar. The pinned equalizer bar gives the roller frames the ability to oscillate up or down independently to better match ground contours while providing maximum traction and operator comfort. The redesigned equalizer bar features bolted end pins to offer longer life and reduce downtime. This design also allows for improved serviceability and reliability.

Serviceability

Simplified service means more productive uptime.

Built-in Serviceability. Major D6T components are made as modules and most can be removed without disturbing or removing others. This means less service time and more productivity.

Caterpillar Monitoring System. The D6T features a flexible monitoring system that is easily upgraded by flashing software. As technology changes and new electronics and software become available, this upgradable monitoring system allows the machine to be easily updated and take advantage of improvements.

The Caterpillar Monitoring System is designed to:

- Allow easy upgrades
- Reduce downtime
- Match software to unique application needs

Power Train Oil Filter and Pressure Taps. The power train oil filter and pressure taps are remote-mounted in the right-hand fender. This provides ease of service and aids machine diagnostics.

Engine Oil Filter. The engine oil filter is located on the engine for easy servicing access and minimal downtime and is the only engine maintenance item on the right side of the engine compartment. An optional quick oil change attachment can further reduce maintenance time.

Water Separator and Fuel Filter. Easily located just inside the engine access panel, the water separator functions as the primary fuel filter, just ahead of the secondary fuel filter. A standard electric priming pump on the primary filter reduces the effort required to prime the system.

Quick Disconnect Fittings. Quick disconnect fittings allow for fast diagnosis of the power train and hydraulic oil systems.

Scheduled Oil Sampling Analysis. Scheduled oil sampling is made easier through live sampling ports for the engine oil, power train hydraulics and coolant. The ports are also color coded for easy identification of each system.

Underhood Service Light. To make nighttime service and maintenance easier, an adjustable service light is located under the hood behind the radiator on the left hand side.

SystemOne™ Undercarriage

The elevated sprocket arrangements allow optimized balance for the best possible performance in each application.

SystemOne™ Undercarriage. The exclusive SystemOne Undercarriage is designed for reliability and durability by greatly increasing undercarriage life and reducing owning and operating costs.

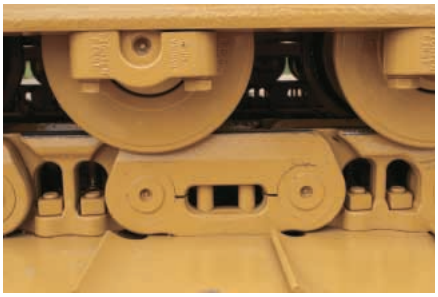

Master Link. A unique feature of the System One Undercarriage is that, unlike traditional undercarriage, a master style link is not required. This improves track reliability and durability. The unique straight link design allows the track to be taken apart at any joint by using the proper Caterpillar tooling to press the link on or off.

A clamp-style master link is available but not recommended for high impact conditions or machines using wide shoes in these types of applications.

Shoe Selection. Shoe selection is still key to maintaining the proper flotation while using the narrowest shoe possible. There are several sizes in both moderate and extreme service available.

Sealed Cartridge-Style Joints. The all-new cartridge design is factory assembled and sealed for life. A new revolutionary sealing system, synthetic oil, a factory set face load and a newly developed retention system that eliminates endplay are all new features.

Roller Design. The SystemOne™ roller has a taller flange to improve track guiding, especially in side-sloping applications. Advanced features and reduced piece parts enhance the rollers which help eliminate any flexing in the collars and avoid oil loss. The roller is maintenance-free and serviced as a group only. To achieve total balanced wear, carrier rollers with increased wear life are also used.

U/C Config	STD	XL	XL VPAT	XW	XW VPAT	LGP	LGP VPAT
D6T	1880 mm (74 in)	1880 mm (74 in)	2134 mm (84 in)	2032 mm (80 in)	2286 mm (90 in)	2286 mm (90 in)	2286 mm (90 in)

D6T Track Gauges

Center Tread Idler. SystemOne Undercarriage uses center tread idlers which coupled with new, taller flange rollers, improve guiding and eliminate link scalloping. The center tread idler will increase system life 50 percent or more in most applications since they will last as long as two link assemblies. In combination with the rotating bushing design, the center tread idlers and sprocket segments can, in most cases, be reused through at least two undercarriage lives.

Track Gauge. Wider gauges for the D6T ensure better overall performance on slopes and make the tractor easier to turn in a variety of applications. Additionally, the gauge changes allow for wider straight shoes on all configurations except LGP VPAT.

Primary Track Guiding. SystemOne track primary track guiding is greatly improved over conventional track guiding. New SystemOne single flange track rollers have a 40 percent increase in flange height which increases roller flange side surface area to greatly improve track retention in the rollers. Only the tall, single flange rollers are offered with SystemOne undercarriage.

Secondary Track Guiding. SystemOne secondary track guiding is improved. The straight track link design eliminates the conventional link pin boss. The fixed track frame guiding surfaces guide directly on the hardened link side rail. The fixed guide wear surfaces are specifically profiled to match the SystemOne track link side rail geometry.

Work Tools

The D6T Work Tools are designed to provide flexibility to match the machine to the job.

Cat® Blades. All blades feature a strong box-section design that resists twisting and cracking. Blades are made of Cat DH-2™ steel that has high tensile strength and stands up to the most severe applications. Heavy moldboard construction and hardened bolt-on cutting edges and end bits add strength and durability.

Semi-Universal. The Semi-Universal blade is built for tough applications where penetration and capacity is important. The blade wings are designed for superior load retention and penetration in tightly packed materials.

Straight Blade. The S-blade provides good versatility. Since it has less blade capacity, it can handle heavier materials than a larger blade.

Angle Blade. The angle blade is secured by outside-mounted pusharms using a pinned connection that allows blade angling and tilting, left or right. Blade angle is changed manually and blade tilt is changed hydraulically.

Variable Pitch Angle Tilt (VPAT) Blade. The Variable Pitch Angle Tilt (VPAT) blade allows the operator to hydraulically adjust the blade lift, angle and tilt simultaneously using the ergonomically designed blade control. The operator can also manually adjust blade pitch. The versatility of the VPAT blade gives the D6T the ability to take on a variety of applications such as finish grading, spreading material, side casting, V-ditching and backfilling. The VPAT blade is available on the XL, XW and LGP configurations and requires either a counterweight or a rear work tool attachment for optimal machine balance.

The new D6T VPAT blade offers several improvements over the Series II design:

- Manually adjustable blade pitch
- Better cutting edge visibility from operator station
- Improved tilt and angle cylinder lines routing and guarding
- Improved structural durability
- No wear plates required on the radiator guard or main frame

Site Preparation Arrangements. The Ripper Package and Drawbar Package are configured to optimize the performance of the D6T in light to medium duty dozing applications common to site preparation jobs.

Answering a need for a maneuverable tractor with the ability to cut and finish grades, the D6T gives operators the stability needed when working on slopes. When coupled with the VPAT blade, the D6T allows for more efficient rough and finish grade in applications such as golf course development and house pad construction.

L-Shaped Push Arms. L-shaped push arms bring the blade closer to the machine than diagonal brace designs, providing excellent maneuverability, machine balance and blade penetration. The L-shaped design provides solid lateral stability throughout the life of the machine and better cylinder positions for constant pryout independent of blade height.

Cutting Edges and End Bits. High-tensile strength Cat DH-2™ steel cutting edges resist torsional bending and distortion in tough applications. End bits are DH-3 to provide maximum service life in tough materials.

Load Sensing Hydraulics. Field-proven, load-sensing, pilot controlled hydraulics respond to operating requirements by automatically and continually adjusting hydraulic power to maximize work tool efficiency.

Multi-Shank Ripper. The multi-shank parallelogram style ripper offers the choice of one, two or three shanks depending on job conditions. Curved or straight ripper shanks are available.

Winch. A single lever control actuates both clutch and brake functions to improve operator efficiency.

- Input clutches on PTO shaft reduces engine horsepower losses to maintain fuel efficiency

- Clutch engagement and brake release are automatically synchronized for smoother operation
- Winch components can be serviced with winch mounted on the tractor

Rear Counterweight. Rear counterweights may be needed to optimize balance for backing up steep slopes or increasing performance in heavy dozing applications. Rear counterweights are recommended if another rear attachment is not specified. Rear counterweights are required with VPAT blades.

Drawbar. The D6T can be equipped with a drawbar for retrieving other equipment or pulling work tools such as:

- Disks
- Compactors
- Chopper wheels

Optional implement towing arrangements allow for quick setup and use of a hydraulically controlled towed scraper.

Integrated Electronic Solutions

Caterpillar technology offers customers new opportunities for efficiency and profitability.

AccuGrade System for Track-Type Tractors. Caterpillar is helping customers revolutionize the way they move material with new technology solutions for earthmoving machines – solutions that provide greater accuracy, higher productivity, lower operating costs and more profitability.

The AccuGrade System is designed and integrated into the machine and hydraulic systems to create an automated blade control system that allows operators to grade with increased accuracy.

The system uses machine-mounted sensors to calculate precise blade slope and elevation information.

The integrated electrohydraulic valve control module uses the information received from the sensors to automatically adjust the blade to maintain grade.

Automated blade control allows operators to improve efficiency and productivity by achieving grade faster and in fewer passes than ever before, reducing the need for traditional survey stakes or grade checkers.

AccuGrade Ready Option. The factory ready option machine makes system installation and setup quick and easy, and optimizes performance and reliability.

- Hydraulic control systems are integrated into the machine hydraulics for maximum performance and dependability.
- AccuGrade controls are integrated into the machine controls and levers for reliable operation and precise control.
- Wiring harnesses and cables are routed during assembly for improved wear protection and better reliability.
- System is designed to withstand vibration for long life in rugged working environments.
- Safety interlock feature is built in for added protection during automated operation.

AccuGrade Laser. AccuGrade Laser designed for precise grade control using a laser transmitter and receiver.

A laser transmitter is set up on the work site and creates a constant grade reference over the work area. A digital laser receiver is mounted on the machine and captures the laser signal as the machine moves across the work site.

The system captures information and calculates the blade adjustments necessary to achieve grade. The system makes automatic elevation adjustments typically performed by the operator and provides automatic blade control. The operator simply steers the machine. The system also calculates cut/fill requirements for manual blade control.

AccuGrade GPS. AccuGrade GPS computes the positioning information on the machine, compares the position of the blade relative to the design plan and delivers that information to the operator via an in-cab display.

Information, such as blade elevation, necessary cut/fill to achieve grade, visual indication of the blade's position on the design surface and a graphical view of the design plan with machine location.

AccuGrade GPS puts all the information the operator needs to complete the job in the cab, resulting in a greater level of control. Vertical and horizontal guidance tools visually guide the operator to the desired grade.

Automated features allow the hydraulic system to automatically control blade adjustments to move the blade to grade. The operator simply uses the light bars to guide the machine for consistent, accurate grades and slopes, resulting in higher productivity with less fatigue.

Increases Productivity and Efficiency.

- Increases productivity by up to 50%
- Reduces guesswork and costly rework by moving dirt right the first time
- Reduces survey costs up to 90%
- Improves material utilization
- Reduces operating costs
- Extends the work day

Enhances Worksite Safety.

- Reduces the need for ground personnel (survey stakers and checkers) on the worksite, in the vicinity of working equipment.

Assists with Labor Shortage.

- Reduces labor requirements and costs
- Customers can get the job done more quickly and efficiently
- Reduces need for staking and grade checkers
- Empowers operator, and improves operator confidence by delivering grading information to the cab

Improves Employee Satisfaction and Retention.

- In-cab display brings elevation control to the cab
- Empowers operator with real-time results
- Real-time feedback on progress increases job satisfaction, eliminates guesswork and reduces operator stress
- Improves operator skills and takes performance to the next level
- Investing in the latest technology leads to a sense of value and trust by the operator

Cat® Product Link. When machines are operating at several different job sites, it becomes more difficult to keep current and accurate records. That can lead to missed maintenance, poor use of assets and wasted time. Product Link provides two-way information flow between machine on-board systems and your desktop computer through Dealer Store Front and Equipment Manager. Cat Product Link enables the use of Equipment Manager to keep you in touch with your machines.

Benefits.

- Provides machine location
- Provides machine health information
- Eliminates trips for service meter hour readings
- Monitors fuel level and consumption
- Identifies unauthorized machine use
- Facilitates efficient maintenance scheduling
- Can be retrofitted on Cat and other brands of machines

Cat Machine Security System (MSS). This Caterpillar designed system guards against theft by disabling the starting system when a potential thief is attempting to steal it using the standard Caterpillar key. Only an MSS key with your unique code will allow the machine to start. And, because MSS is integrated into the electronics, thieves cannot bypass it to start your equipment.

Benefits.

- Protects from theft
- Control who can start your equipment
- Control which days and hours equipment may be started
- Easily installed on Cat and other brands of equipment
- Caterpillar designed and machine integrated
- Potential insurance savings due to increased machine security

Total Customer Support

Caterpillar dealer support is unmatched in the industry!

Machine Selection. Make detailed comparisons of the machines you are considering before you buy. How long do components last? What is the cost of preventive maintenance? What is the true cost of lost production? Your Cat dealer can give you answers to these very important questions.

Purchase. Consider the financing options available, as well as the day-to-day operating costs. This is also the time to look at dealer services that can be included in the cost of the machine to yield lower equipment owning and operating costs over the long run.

Serviceability. Quick and easy serviceability means less downtime and more productivity. Sight gauges, filter locations, convenient access to oil and coolant sampling ports and an engine compartment-mounted work lamp make daily and periodic service faster and easier.

Product Support. Nearly all D6T parts can be found at Cat dealer parts counters. Cat dealers utilize a worldwide computer network to find in-stock parts to minimize machine downtime. An exchange program for major components may be available. This will shorten repair time and lower costs.

Remanufactured Components. Genuine Cat remanufactured parts helps save money with the same warranty and reliability as new products at cost savings of 40 to 70 percent. Components are available for the drive train, engine and hydraulics.

Parts Pricing. The price of parts can impact the overall owning and operating cost of any piece of equipment and are often overlooked when a purchase is being considered. At several points in the machine's life cycle, maintenance or repair parts will be required. Parts pricing is all about maximizing the bottom line of the end-user and as a result, Cat parts are priced, on average, 35 percent lower than those of other tractors in this size class.

Resale Value. History has proven, and continues to show, that Cat machines bring a much higher price than other brands when resold. This translates into all Cat equipment owners getting a greater return on their investment than with other brands.

Engine – Standard

Engine Model	Cat® C9 ACERT®	
Gross Power	159 kW	213 hp
Net Power – Caterpillar	138 kW	185 hp
Net Power – ISO 9249	138 kW	185 hp
Net Power – SAE J1349	136 kW	183 hp
Net Power – EU 80/1269	138 kW	185 hp
Net Power – DIN 70020	192 PS	
Bore	112 mm	4.4 in
Stroke	149 mm	5.9 in
Displacement	8.8 L	537 in^3

Engine – XL / XW / LGP

Engine Model	Cat C9 ACERT	
Gross Power	170 kW	228 hp
Net Power – Caterpillar	149 kW	200 hp
Net Power – ISO 9249	149 kW	200 hp
Net Power – EU 80/1269	149 kW	200 hp
Net Power – SAE J1349	148 kW	198 hp
Net Power – DIN 70020	207 PS	
Bore	112 mm	4.4 in
Stroke	149 mm	5.9 in
Displacement	8.8 L	537 in^3

- Engine ratings at 1,850 rpm
- Net power advertised is the power available at the flywheel when the engine is equipped with fan at maximum speed, air cleaner, muffler, and alternator
- No derating required up to 2286 m (7,500 ft) altitude, beyond 2286 m (7,500 ft) automatic derating occurs
- Maximum altitude of 3048 m (10,000 ft)

Transmission

5 Speed	3 Speed		
1.5 Forward	1	3.75 km/h	2.33 mph
2.0 Forward		5.15 km/h	3.2 mph
2.5 Forward	2	6.58 km/h	4.09 mph
3.0 Forward		8.53 km/h	5.3 mph
3.5 Forward	3	11.44 km/h	7.11 mph
1.5 Reverse	1	4.83 km/h	3 mph
2.0 Reverse		6.6 km/h	4.1 mph
2.5 Reverse	2	8.4 km/h	5.22 mph
3.0 Reverse		10.94 km/h	6.8 mph
3.5 Reverse	3	14.55 km/h	9.04 mph

Service Refill Capacities

Fuel Tank	424 L	112 gal
Cooling System	76.8 L	20.3 gal
Engine Crankcase	28 L	7.4 gal
Power Train	145.7 L	38.5 gal
Final Drives (each)	13.6 L	3.6 gal
Roller Frames (each)	24.6 L	6.5 gal
Pivot Shaft Compartment	1.9 L	0.5 gal
Hydraulic Tank	51.5 L	13.6 gal

Weights

Operating Weight		
STD A	18 737 kg	41,298 lb
STD SU	18 393 kg	40,550 lb
XL A	20 319 kg	44,795 lb
XL SU	20 148 kg	44,420 lb
XL VPAT	21 178 kg	46,690 lb
XW A	21 184 kg	46,703 lb
XW VPAT	21 444 kg	47,276 lb
XW SU	20 739 kg	45,723 lb
LGP S	21 783 kg	48,024 lb
LGP VPAT	23 119 kg	50,968 lb
Shipping Weight		
STD A	14 776 kg	32,576 lb
STD SU	14 776 kg	32,576 lb
XL A	16 771 kg	36,974 lb
XL SU	16 771 kg	36,974 lb
XL VPAT	17 246 kg	38,022 lb
XW A	17 432 kg	38,431 lb
XW SU	17 432 kg	38,431 lb
XW VPAT	17 784 kg	39,208 lb
LGP S	18 915 kg	41,701 lb
LGP VPAT	19 113 kg	42,135 lb

- Operating weight includes lubricants, coolant, full fuel tank, standard track, cab, hydraulic controls, drawbar and operator.
- Shipping weight includes lubricants, coolant, cab, hydraulic controls, standard track and 10 percent fuel.

Hydraulic Controls – Pump

RPM at rated Engine Speed – Implement	1,965 rpm	
RPM at rated Engine Speed – Steering	2,625 rpm	
Pump Output – Implement	189 L/min	49.9 gal/min
Pump Output – Steering	179 L/min	47.3 gal/min
Lift Cylinder Flow	189 L/min	49.9 gal/min
Tilt Cylinder Flow	80 L/min	21.1 gal/min
Ripper Cylinder Flow	189 L/min	49.9 gal/min
Angle Cylinder Flow – VPAT	170 L/min	44.9 gal/min

Hydraulic Controls – Main Relief Valve

Pressure Setting – Steering	41 700 kPa	6,048 psi
Pressure Setting – Implement (Non-VPAT)	21 700 kPa	3,147 psi
Pressure Setting – Implement (VPAT)	24 440 kPa	3,545 psi

Hydraulic Controls – Maximum Operating Pressure (Non-VPAT)

Bulldozer – Lift	19 300 kPa	2,799 psi
Bulldozer – Tilt	19 300 kPa	2,799 psi
Ripper	19 300 kPa	2,799 psi

Hydraulic Controls – Maximum Operating Pressure (VPAT)

Bulldozer – Lift	21 550 kPa	3,126 psi
Bulldozer – Tilt	21 550 kPa	3,126 psi
Bulldozer – Angle	21 550 kPa	3,126 psi
Ripper	19 300 kPa	2,799 psi

Ripper

Type	Fixed Parallelogram	
Number of Pockets	3	
Overall Beam Width	2202 mm	87 in
Beam Cross Section	216 × 254 mm	8.5 × 10 in
Maximum Clearance Raised (under tip, pinned in bottom hole)	511 mm	20.1 in
Maximum Penetration	500 mm	19.7 in
Maximum Penetration Force	6603 kg	14,557 lb
Pryout Force	9134 kg	20,137 lb
Weight – With One Shank	1634 kg	3,606 lb
Each Additional Shank	74 kg	163 lb

Winch

Winch Model	PA 56	
Weight	1179 kg	2,600 lb
Oil Capacity	67 L	17.8 gal
Winch and Bracket Length	1210 mm	47.6 in
Winch Case Length	1210 mm	47.6 in
Winch Case Width	975 mm	38.4 in
Increased Tractor Length – STD	517 mm	20.4 in
Increased Tractor Length – XL/XW	517 mm	20.4 in
Increased Tractor Length – LGP	397 mm	15.6 in
Drum Diameter	254 mm	10 in
Drum Width	330 mm	13 in
Flange Diameter	504 mm	19.8 in
Drum Capacity – 22 mm (0.88 in)	88 m	290 ft
Drum Capacity – 25 mm (1.0 in)	67 m	220 ft
Drum Capacity – 29 mm (1.13 in)	67 m	220 ft
Ferrule Size (O.D. × Length)	54 × 67 mm	2.10 × 2.63 in

Standards

ROPS/FOPS	ROPS meets criteria SAE J395, SAE 1040 MAY 94, ISO 3471-1994/ FOPS meets ISO 3449-1992 Level II
Cab	Meets appropriate standards as listed below.
Brakes	Brakes meet criterion SAE J/ISO 10265 MAR99

- The operator sound exposure Leq (equivalent sound pressure level) measured according to the work cycle procedures specified in ANSI/SAE J1166 OCT 98 is 80 dB(A) for cab offered by Caterpillar when properly installed and maintained and tested with the doors and windows closed.
- Hearing protection may be needed when operating with an open operator station and cab (when not properly maintained or doors/windows open) for extended periods or in noisy environment.
- The exterior sound pressure level for the standard machine measured at a distance of 15 meters (49.2 ft) according to test procedures specified in SAE J88 APR 95, mid-gear-moving operation, is 85 dB(A).

Dimensions

All dimensions are approximate.

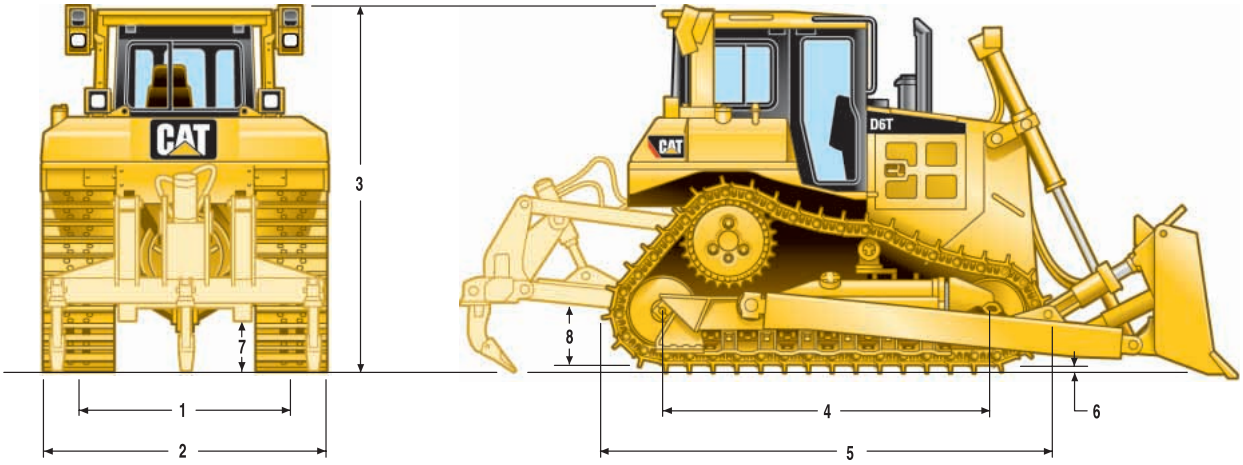

		STD	XL	XL VPAT
1	Track gauge	1880 mm (74 in)	1880 mm (74 in)	2134 mm (84 in)
2	Width of tractor			
	Over trunnions	2640 mm (8 ft 8 in)	2640 mm (8 ft 8 in)	—
	Without trunnions (std. track)	2440 mm (8 ft 0 in)	2440 mm (8 ft 0 in)	2692 mm (8 ft 10 in)
3	Machine height from tip of grouser:			
	Stack	3143 mm (10 ft 4 in)	3143 mm (10 ft 4 in)	3143 mm (10 ft 4 in)
	ROPS	3195 mm (10 ft 6 in)	3195 mm (10 ft 6 in)	3195 mm (10 ft 6 in)
4	Length of track on ground	2664 mm (8 ft 9 in)	2871 mm (9 ft 5 in)	2871 mm (9 ft 5 in)
5	Length of basic tractor	3860 mm (12 ft 0 in)	3860 mm (12 ft 8 in)	3860 mm (12 ft 8 in)
	With following attachments add:			
	Drawbar	217 mm (8.5 in)	217 mm (8.5 in)	217 mm (8.5 in)
	Ripper Multi-Shank (tip at ground line)	1403 mm (4 ft 7 in)	1403 mm (4 ft 7 in)	1403 mm (4 ft 7 in)
	Winch	517 mm (1 ft 8 in)	517 mm (1 ft 8 in)	517 mm (1 ft 8 in)
	S Blade	1043 mm (3 ft 5 in)	—	—
	SU Blade	1235 mm (4 ft 1 in)	1472 mm (4 ft 10 in)	—
	A Blade	1147 mm (3 ft 9 in)	1349 mm (4 ft 5 in)	—
	VPAT Blade	—	—	1524 mm (5 ft 0 in)
6	Height of grouser	65 mm (2.6 in)	65 mm (2.6 in)	65 mm (2.6 in)
7	Ground clearance	383 mm (1 ft 3 in)	383 mm (1 ft 3 in)	383 mm (1 ft 3 in)
	Track pitch	203 mm (8.0 in)	203 mm (8.0 in)	203 mm (8.0 in)
	Number of shoes per side	39	41	41
	Number of rollers per side	6	7	7
	Standard shoe	560 mm (22 in)	560 mm (22 in)	560 mm (22 in)
	Ground contact area (std. track)	2.98 m^2 (4620 in^2)	3.22 m^2 (4972 in^2)	3.22 m^2 (4972 in^2)
	Ground pressure*	0.614 kg/cm^2 (8.74 psi)	0.623 kg/cm^2 (8.90 psi)	0.658 kg/cm^2 (9.36 psi)
8	Drawbar height	576 mm (1 ft 11 in)	576 mm (1 ft 11 in)	576 mm (1 ft 11 in)
	From ground face of shoe	511 mm (1 ft 8 in)	511 mm (1 ft 8 in)	511 mm (1 ft 8 in)

*STD, XL, XW with SU blade, with no rear attachments unless otherwise specified.

Dimensions

All dimensions are approximate.

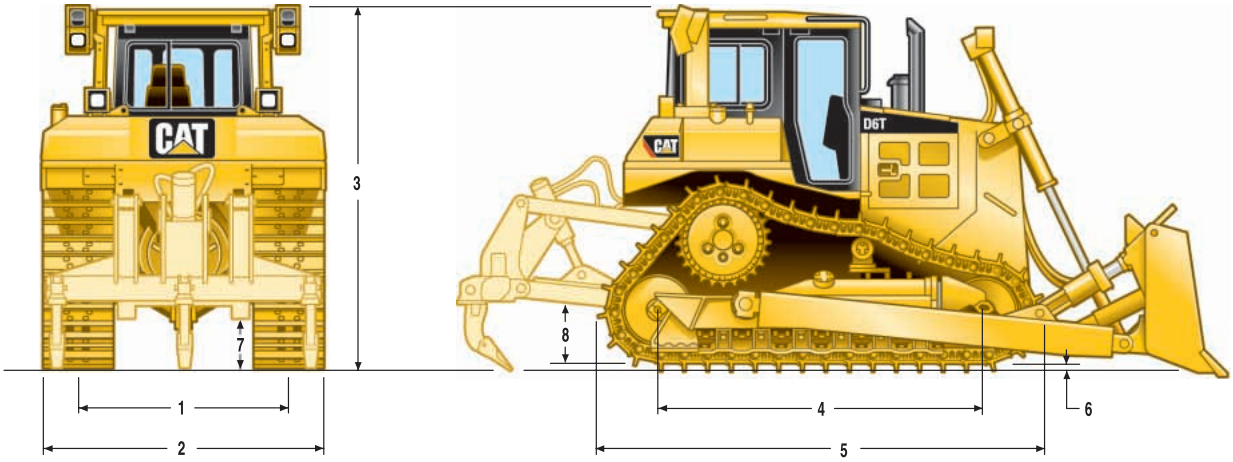

		XW	XW VPAT	LGP S	LGP VPAT
1	Track gauge	2032 mm (80 in)	2286 mm (90 in)	2286 mm (90 in)	2286 mm (90 in)
2	Width of tractor				
	Over trunnions	2950 mm (9 ft 8 in)	—	3480 mm (11 ft 5 in)	—
	Without trunnions (std. track)	2794 mm (9 ft 2 in)	2997 mm (9 ft 10 in)	3193 mm (10 ft 6 in)	3150 mm (10 ft 4 in)
3	Machine height from tip of grouser:				
	Stack	3143 mm (10 ft 4 in)	3143 mm (10 ft 4 in)	3193 mm (10 ft 6 in)	3193 mm (10 ft 6 in)
	ROPS	3195 mm (10 ft 6 in)	3195 mm (10 ft 6 in)	3245 mm (10 ft 8 in)	3245 mm (10 ft 8 in)
4	Length of track on ground	2871 mm (9 ft 5 in)	2871 mm (9 ft 5 in)	3275 mm (10 ft 9 in)	3275 mm (10 ft 9 in)
5	Length of basic tractor	3860 mm (12 ft 8 in)	3860 mm (12 ft 8 in)	4247 mm (13 ft 11 in)	4247 mm (13 ft 11 in)
	With following attachments add:				
	Drawbar	217 mm (8.5 in)	217 mm (8.5 in)	251 mm (9.9 in)	251 mm (9.9 in)
	Ripper Multi-Shank (tip at ground line)	1403 mm (4 ft 7 in)	1403 mm (4 ft 7 in)	—	—
	Winch	517 mm (1 ft 8 in)	517 mm (1 ft 8 in)	397 mm (1 ft 4 in)	397 mm (1 ft 4 in)
	S Blade	—	—	1218 mm (4 ft 0 in)	—
	SU Blade	1472 mm (4 ft 10 in)	—	—	—
	A Blade	1349 mm (4 ft 5 in)	—	—	—
	VPAT Blade	—	1524 mm (5 ft 0 in)	—	1743 mm (5 ft 9 in)
6	Height of grouser	65 mm (2.6 in)	65 mm (2.6 in)	65 mm (2.6 in)	65 mm (2.6 in)
7	Ground clearance	383 mm (1 ft 3 in)	383 mm (1 ft 3 in)	433 mm (1 ft 5 in)	433 mm (1 ft 5 in)
	Track pitch	203 mm (8.0 in)	203 mm (8.0 in)	203 mm (8.0 in)	203 mm (8.0 in)
	Number of shoes per side	41	41	45	45
	Number of rollers per side	7	7	8	8
	Standard shoe	760 mm (30 in)	710 mm (28 in)	915 mm (36 in)	785 mm (31 in)
	Ground contact area (std. track)	4.36 m^2 (6780 in^2)	4.08 m^2 (6328 in^2)	5.99 m^2 (9288 in^2)	5.16 m^2 (7998 in^2)
	Ground pressure*	0.472 kg/cm^2 (6.72 psi)	0.524 kg/cm^2 (7.45 psi)	0.362 kg/cm^2 (5.15 psi)	0.446 kg/cm^2 (6.35 psi)
8	Drawbar height	576 mm (1 ft 11 in)	576 mm (1 ft 11 in)	626 mm (2 ft 1 in)	626 mm (2 ft 1 in)
	From ground face of shoe	511 mm (1 ft 8 in)	511 mm (1 ft 8 in)	561 mm (1 ft 10 in)	561 mm (1 ft 10 in)

*STD, XL, XW with SU blade, with no rear attachments unless otherwise specified.

Weight

All dimensions are approximate.

Bulldozer Specifications

		S STD	S LGP	SU STD	SU XL	SU XW	A † STD	A † LGP	A † XL	A † XW	VPAT XL	VPAT XW	VPAT LGP
Blade Capacity	m^3	3.89	3.75	5.61	5.31	5.05	3.93	5.22	3.93	4.30	4.73	5.10	4.32
	yd^3	5.09	4.90	7.34	6.94	6.60	5.14	6.82	5.14	5.63	6.19	6.67	5.65
Width	mm	3360	4063	3260	3260	3556	4166	5070	4500	4200	3880	4160	4160
	ft	11.00	13.33	10.66	10.66	11.66	13.66	16.63	14.75	13.75	12.73	13.65	13.65
Height	mm	1257	1101	1412	1412	1412	1155	1134	1155	1169	1295	1295	1191
	in	50	44	56	56	56	45	45	45	46	51	51	47
Digging Depth	mm	473	655	473	459	459	506	828	524	500	737	737	672
	in	19	26	19	18	18	20	33	21	20	29	29	26
Ground Clearance	mm	1104	1083	1104	1195	1195	1142	1088	1205	1242	1174	1174	1230
	in	44	43	44	47	47	45	43	47	49	46	46	48
Max. Tilt	mm	765	701	743	743	743	408	476	408	408	440	460	502
	in	30	28	29	29	29	16	19	16	16	17	18	20
Weight*	kg	2599	2836	2699	2973	2949	3050	3430	3150	3400	3560	3650	3620
	lb	5,730	6,252	5,950	6,554	6,501	6,724	7,562	6,945	7,496	7,848	8,047	7,981
Weight**	kg	—	—	—	—	—	—	—	—	—	1593	1681	1591
	lb	—	—	—	—	—	—	—	—	—	3,512	3,705	3,507

* Includes push arms, blade, blade tilt cylinder(s), cutting edges and miscellaneous hardware components

** VPAT blade only

† Angle dozers include two tilt cylinders.

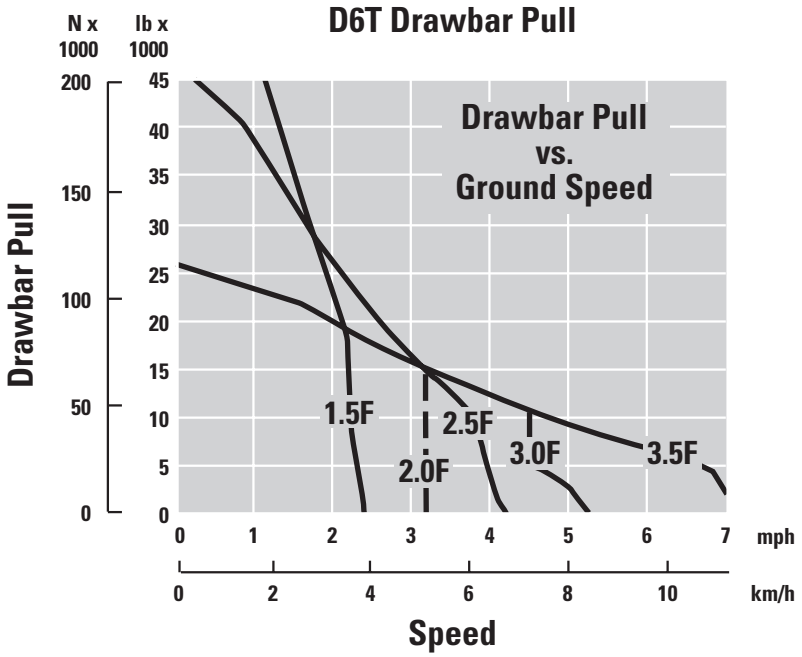

Standard Equipment

Standard equipment may vary. Consult your Caterpillar dealer for details.

ELECTRICAL
- Alarm, backup
- Alternator, 95-amp
- Batteries, two maintenance-free 12V (24V system)
- Converter, 12V, 10 amp with two power outlets
- Diagnostic connector
- Horn, forward warning

OPERATOR ENVIRONMENT
- Air conditioner, under-hood
- Armrests, adjustable
- Cab, ROPS/FOPS, sound-suppressed
- Differential steering control with touch shift
- Electronic distance travel indicator
- Caterpillar Monitoring System:
  - Temperature (coolant, hydraulic, power train), fuel level, tachometer, odometer, gear indicator, and diagnostics
- Foot pads, dash
- Heater
- Hourmeter, electronic
- Mirror, rearview
- Pedal, decelerator
- Pilot operated hydraulic controls with electronic deactivation switch
- Radio ready
- Seat, adjustable, contour suspension with gray fabric
- Seat belt, retractable 76 mm (3 in)
- Throttle switch, electronic
- Wipers, intermittent

POWER TRAIN
- Advanced Modular Cooling System (AMOCS)
- Aftercooler, air-to-air (ATAAC)
- Air cleaner, pre-cleaner with strata tube dust ejector
- Air filter with electronic service indicator
- C9 ACERT, diesel, Electronic Unit Injection (EUI)
- Coolant, extended life
- Electronically controlled powershift transmission
- Fan, blower, direct drive
- Final drives, 3-planet single reduction planetary
- Fuel priming pump, electric
- Muffler with mitered stack
- Parking brake, electronic
- Prescreener
- Shift management:
  - Controlled throttle, load compensating
  - Automatic directional and downshift
- Starting aid, automatic ether
- Planetary Transmission, with torque divider
- Turbocharger, waste-gate
- Water separator
- Multi Velocity Program, five speed

UNDERCARRIAGE
- Carrier roller
- Equalizer bar, heavy-duty
- Guards, center track guiding (LGP)
- Guards, end guiding
- Idlers – SystemOne, center tread, lifetime lubricated
- Sprocket rim segments, replaceable
- Track adjusters, hydraulic
- Track roller frames, tubular
- Track rollers, lifetime lubricated
- Track, SystemOne, moderate service:
  - Standard arrangement – 560 mm (22 in), 39-section
  - XL arrangement –
    - 560 mm (22 in), 41 section, (VPAT models)
    - 560 mm (22 in), 41 section (non-VPAT models)
  - XW arrangement –
    - 710 mm (28 in), 41 section (VPAT models)
    - 760 mm (30 in), 41 section (non-VPAT models)
  - LGP arrangement –
    - 785 mm (31 in) offset, 45-section (VPAT models)
    - 915 mm (36 in), 45-section (non-VPAT models)

OTHER STANDARD EQUIPMENT
- CD-ROM parts book
- Cooler, hydraulic oil
- Engine enclosures, perforated
- Front pull device
- Guards, hinged bottom
- Hood, perforated
- Hydraulic, load sensing, dozer lift and tilt
- Product Link ready
- Radiator doors, hinged, fan blast deflector
- Scheduled oil sampling ports:
  - Engine oil, power train oil, hydraulic oil, and engine coolant
- Vandalism protection:
  - Cap locks for fluid compartments and battery box

Optional Equipment

Optional equipment may vary. Consult your Caterpillar dealer for details.

ELECTRICAL
- AccuGrade Ready Option (Laser/GPS)
- Alternator, 150 amp (brushless)
- Alternator, 95 amp (ducted)
- Lights, supplemental:
  - 11 construction (not for VPAT models)
  - 11 waste disposal/VPAT package
  - 7 (for use with VPAT model)
  - 7 (not for VPAT models)
  - Sweeps
- Machine Security System
- Power converter
- Product Link

OPERATOR ENVIRONMENT
- Air conditioner (ROPS mounted)
- Air suspension seat, cloth (for use with cab)
- Canopy Arr. (OROPS)
- Glass, ultra strength
- Seat – vinyl (for use with cab)
- Steps, heavy duty grab handles

POWER TRAIN
- Drains, ecology (torque converter and transmission)
- Fan: Demand (clutch drive), ejector, Flexxaire, or reversible
- Grid, radiator core protector
- Oil change system, high speed engine and power train
- Precleaner: turbine with or without screen, or with prescreener
- Radiator AMOCS, waste handling, 6FIN/IN cores; abrasion resistant cores
- Starting Aids
  - Batteries, heavy duty
  - Heater, engine coolant
- Thermal shield

UNDERCARRIAGE
- SystemOne™, Extreme Service (ES), Moderate Service (MS)
- Track, Pairs (STD/XL)
  - 560 mm (22 in), ES; 610 mm (24 in) MS or ES
- Track, Pairs (XW, non-VPAT)
  - 762 mm (30 in) ES or Trap
- Track, Pair (LGP, non-VPAT)
  - 914 mm (36 in) ES or Trap
- Heavy-duty, Extreme Service (ES), Moderate Service (MS)
- Track, Pairs (STD/XL)
  - 560 mm (22 in) MS or ES; 610 mm (24 in) MS or ES
- Track, Pairs (XW)
  - 762 mm (30 in), MS or ES
- Track, Pairs (LGP, non-VPAT)
  - 914 mm (36 in) MS

GUARDS
- Front pull hook, extreme service, sealed
- Crankcase – extreme service sound suppressed, sealed
- Final drive clamshell
- Final drive seals
- Fuel tank with or without mechanical winch or ripper
- Precleaner
- Radiator, bottom heavy-duty
- Radiator, heavy-duty, punched (non-VPAT)
- Radiator, hinged, two-piece, heavy-duty (non-VPAT)
- Radiator, hinged, 2-piece heavy-duty (VPAT)
- Rear heavy-duty, transmission
- Screen, rear – with ROPS mounted air conditioner
- Seals, idler GP
- Striker bar GP, front and rear
- Sweeps (not compatible with VPAT machines)
- SystemOne™
  - Guard, track guiding, center (STD, XL, XW)
- Guard, track roller (STD, XL, XW, LGP)

HYDRAULICS
- Ripper
- Winch
- AccuGrade

RIPPERS
- Ripper, multi-shank
- Ripper Attachments
  - Tooth, D6 multi-shank ripper
  - Curved or straight (up to 3)

WINCH ARRANGEMENTS (PACCAR)
- Fairlead, 3 rollers
- Fairlead roller (4th roller)
- Installation arrangement, winch
- Winch arr. – slow speed with freespool (slow speed) or (normal speed)

OTHER ATTACHMENTS
- Counterweight, rear
- Counterweight, additional rear slab
- Drawbar, rigid, long or short
- Radio, 12V AM/FM cassette
- Sound suppression

Notes

Notes

D6T Track-Type Tractor

For more complete information on Cat products, dealer services, and industry solutions, visit us on the web at **www.cat.com**

© 2008 Caterpillar
All Rights Reserved
Printed in U.S.A.

Materials and specifications are subject to change without notice.
Featured machines in photos may include additional equipment.
See your Caterpillar dealer for available options.

AEHQ5761-03 (11-08)

Replaces AEHQ5761-02

CAT, CATERPILLAR, their respective logos, ACERT, AccuGrade, SystemOne, "Caterpillar Yellow" and the POWER EDGE trade dress, as well as corporate and product identity used herein, are trademarks of Caterpillar and may not be used without permission.

CATERPILLAR®